Analog, Mixed Signal and Power Management

MC33886

5.0 A H-Bridge

Applications

- Automotive Systems
- DC Motor Control in Industrial and Robotic Systems
- DC Motor and Actuator Control in Boats, RVs, and Marine Systems
- Appliance and White Goods Electrical Actuators
- Powered Machine and Hand Tools
- Antenna Rotors and Dish Positioning Systems

Overview

The 33886 is a monolithic H-Bridge ideal for fractional horsepower DC-motor and bi-directional thrust solenoid control. The IC incorporates internal control logic, charge pump, gate drive, and low $R_{DS(ON)}$ MOSFET output circuitry. The 33886 is able to control continuous inductive DC load currents up to 5.0 A. Output loads can be pulse width modulated (PWM-ed) at frequencies up to 10 kHz.

A Fault Status output reports under-voltage, short-circuit, and over-temperature conditions. Two independent inputs control the two half-bridge totem-pole outputs. Two disable inputs force the H-Bridge outputs to tri-state (exhibit high-impedance).

The 33886 is parametrically specified over a temperature range of -40 °C ≤ T_A ≤ 125 °C, 5.0 V ≤ V+ ≤ 28 V. The IC can also be operated up to 40 V with derating of the specifications. The IC is available in a surface mount power package with exposed pad for heatsinking.

MC33886 Simplified Application Drawing

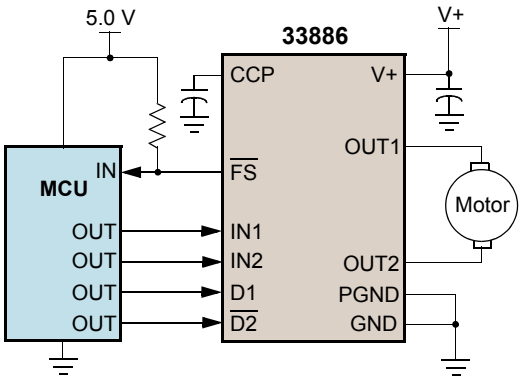

Performance	Typical Values
Outputs	2
RMS Current	5.0 A
$R_{DS(ON)}$ @ 25 °C	120 mΩ
Operating Voltage	5.0 V to 40 V
Switching Time	5.0 µs
ESD	± 2000 V
Operating Temp	-40 °C ≤ T_A ≤ 125 °C
Junction Operating Temp	-40 °C ≤ T_J ≤ 150 °C

freescale™ semiconductor

Features

- 5.0 V to 40 V continuous operation
- 120 mΩ $R_{DS(ON)}$ H-bridge MOSFETs
- TTL /CMOS compatible inputs
- PWM frequencies up to 10 kHz
- Active current limiting via internal constant OFF-time PWM (with temperature dependent threshold reduction)
- Output short-circuit protection
- Under-voltage shutdown
- Fault status reporting
- Additional devices available for comparison in Analog Product Selector Guide SG1002, and Automotive Product Selector Guide SG187

Customer Benefits

- Easy MCU interfacing to a single H-Bridge
- Integral thermal and over-voltage protection
- Enhance device–load status reporting
- H-Bridge Operation to 28 V @ 5.0 A
- Low $R_{DS(ON)}$ H-Bridge maximizes current to load
- Integral charge pump for a simpler design
- Reduced design time

Questions

- Do you need to control a DC motor via microprocessor?
- Are you designing a DC motor controller for motors up to 5.0 A and up to 28 V DC?
- Do you need to drive a motor in both forward and reverse or a solenoid in both push and pull?
- Do you need to incorporate PWM speed and torque control?
- Do you need to provide active braking and freewheeling?

Protection	Detect	Limiting	Shut Down	Auto Retry	Status Reporting
Under-voltage	•		•	•	•
Current Regulation	•	•		•	
Over-temperature	•	•	•		•
Short to GND	•		•		•
Short to V_{PWR}	•		•		•

Ordering Information		
Device	**Temperature Range**	**Package**
MC33886PVW/R2	-40 to 125°C	20 HSOP
Evaluation Board		
KIT33887EKEVBE	Evaluation Board	
Documentation		
MC33886	Data sheet order number	
SG1002	Analog Product Selector Guide	
SG 187	Automotive Product Selector Guide	

20 HSOP

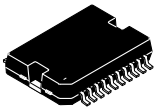

1.27 mm Pitch
16 x 11 mm Body
12.2 x 6.9 mm Exposed Pad

Learn More: For current information about Freescale products, please visit **www.freescale.com**.

Document Number: MC33886FS, Rev. 6.0